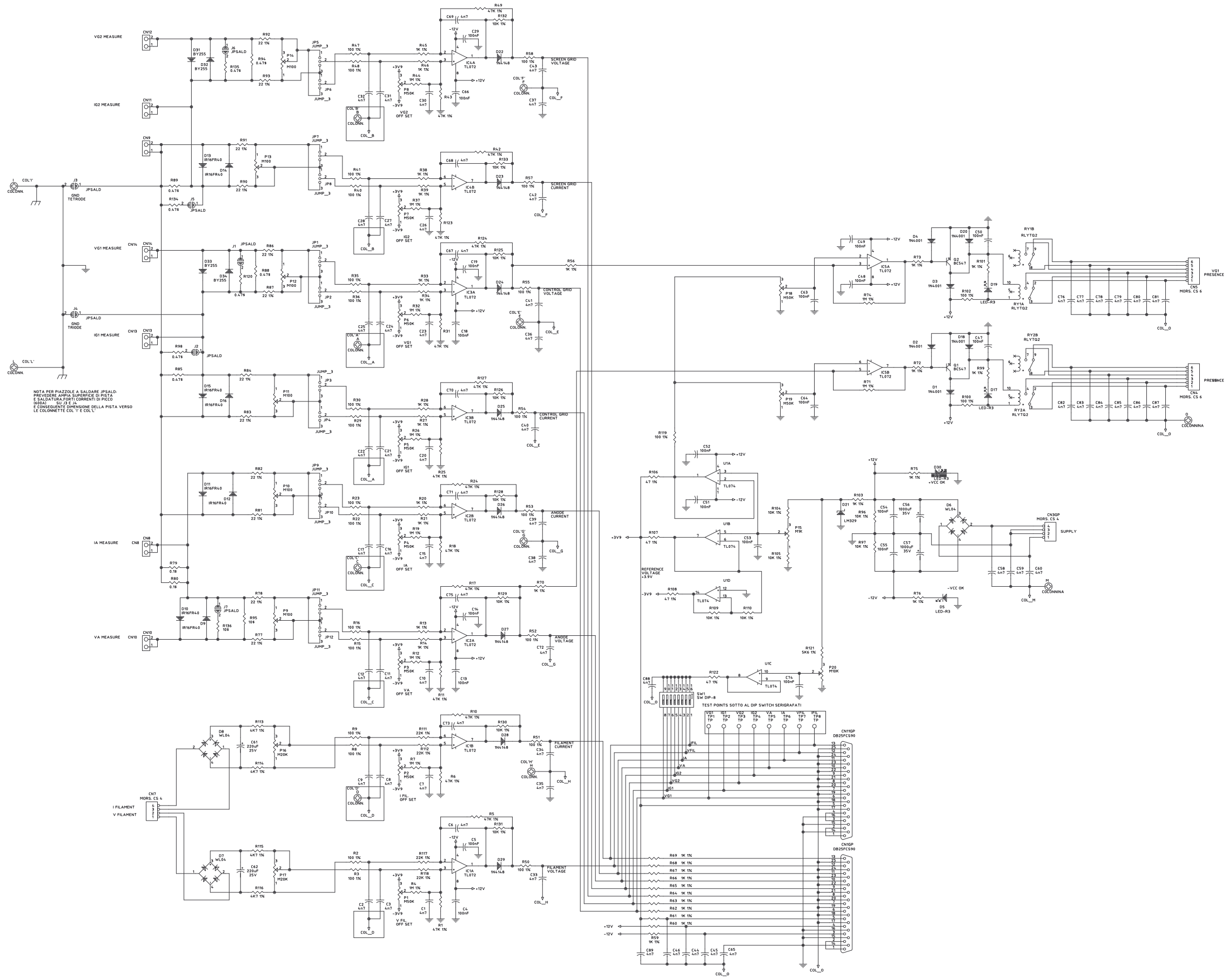

R.V.R. Elettronica S.r.l. (Bo)			
Title	Valve Measure Card Circuit Diagram		
Size	Document Number		REV
E	CSVALVEMEAS		
Date:	March 25, 2000	Sheet 1 of 1	