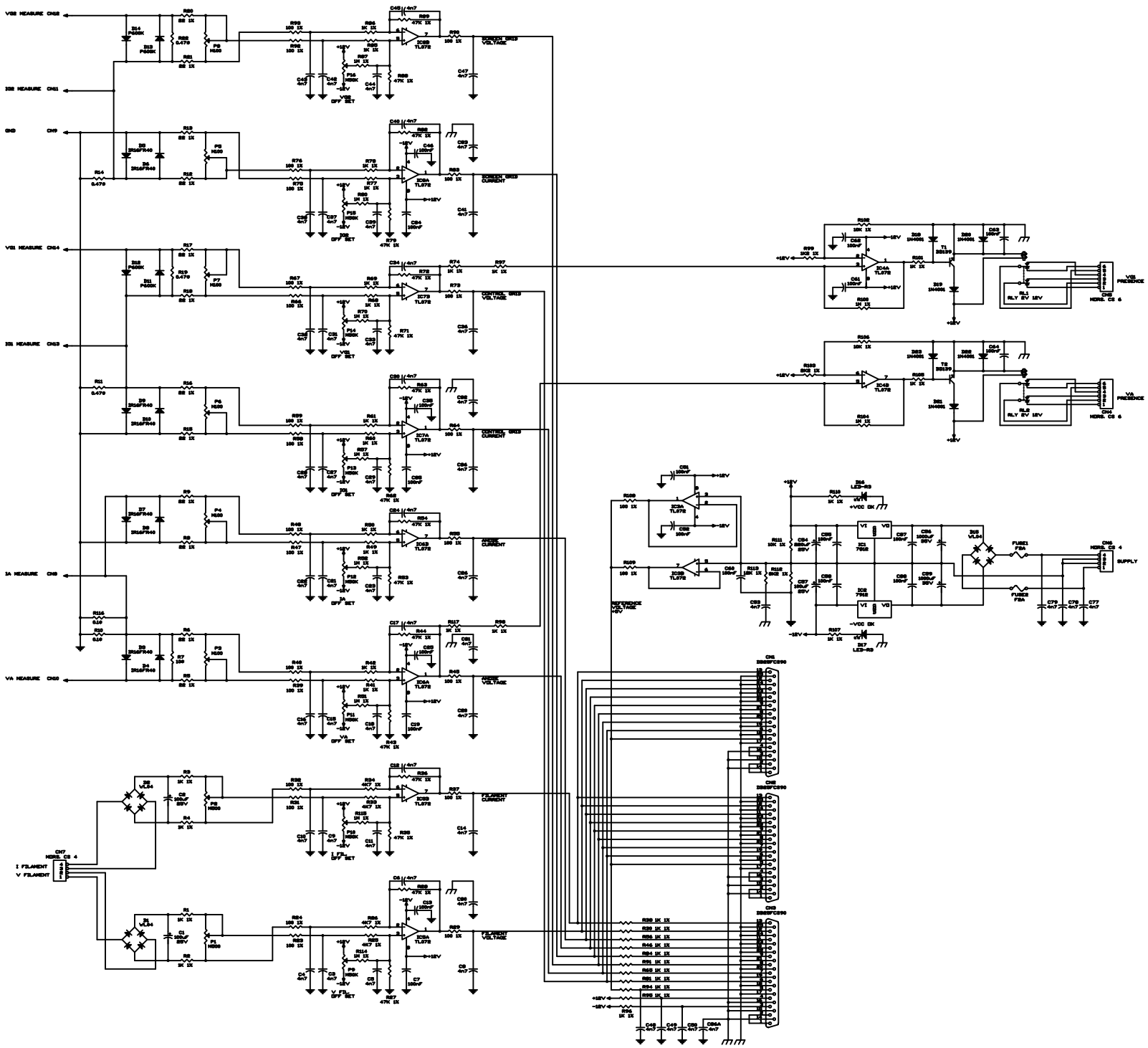

R.V.R. Elettronica S.r.l. (Bo)		
TITLE	Valve Measure Card Circuit Diagram	
DOCUMENT NUMBER		REV
CRVALVEMEAS		